Contents

Contents....1
Introduction....1
Block Diagram....2
Application Note....3
Installation guide....4
SCB-C08 with SCB-C24/26/28....4
SCB-G3-IO....5
FAQ....7
How to control PTZ from analog camera through SCB-C08 converter?....7
How many I/O devices can I connect to SCB-C08?....9
How do I reset C24/C26/C28?....9

Introduction

SCB-C24 provides **16 optical isolated digital output** channels that allow you to output open collector signal to driven your devices on RS485 network. All channel features screw terminals for convenient connection of field signals as well as LED's to indicate channel status. All inputs are equipped with photo-couplers to protect the module against high voltage spikes and ground potential differences.

SCB-C26 provides **16 optical isolated digital input** channels and all of them can be used as counter. All channel features screw terminals for convenient connection of field signals as well as LED's to indicate channel status. All inputs are equipped with photo-couplers to protect the module against high voltage spikes and ground potential differences.

SCB-C28 provides with **4 optical isolated digital input** channels and **4 power relays output**. All channel features screw terminals for convenient connection of field signals as well as LED's to indicate channel status. SCB-C28 can be easily control by SCB-C08.

Copyright © 2010 NUUO Inc. All rights reserved.

Block Diagram

SCB-C24

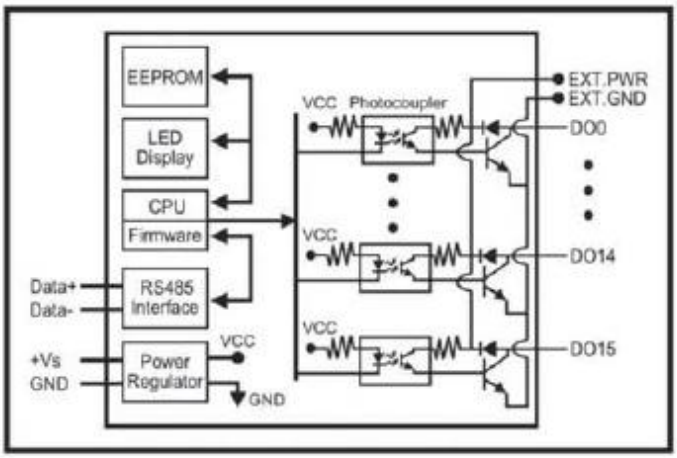

SCB-C26

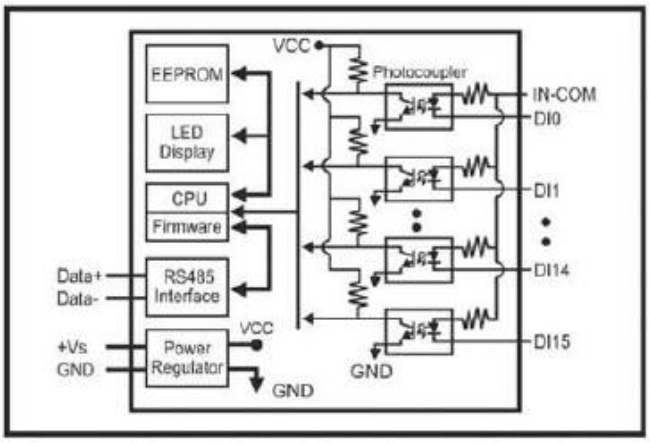

SCB-C28

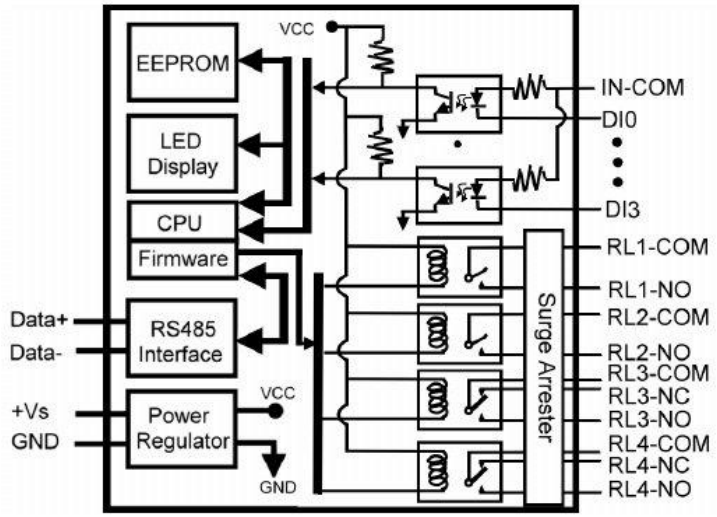

Copyright © 2010 NUUO Inc. All rights reserved.

Application Note

SCB-C24

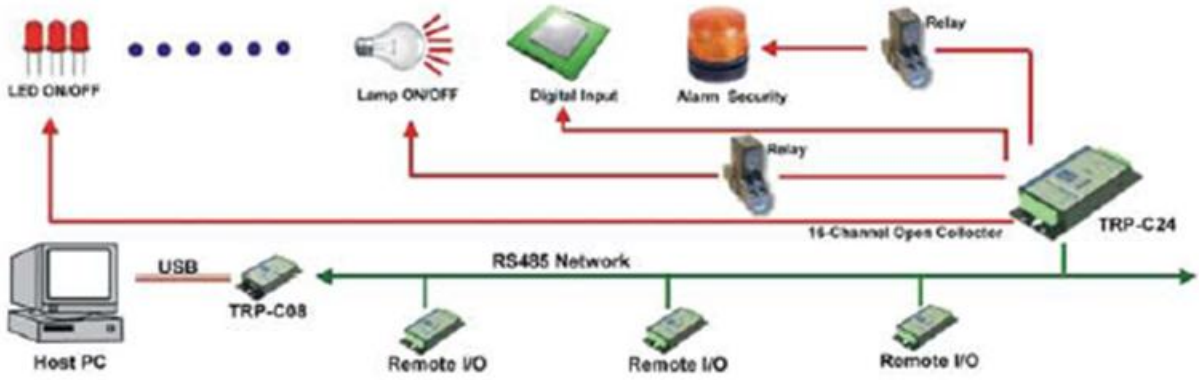

SCB-C26

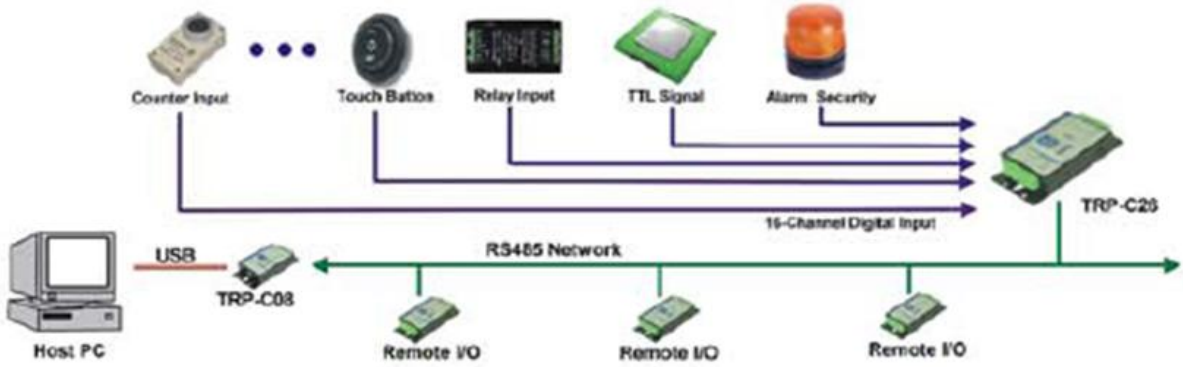

SCB-C28

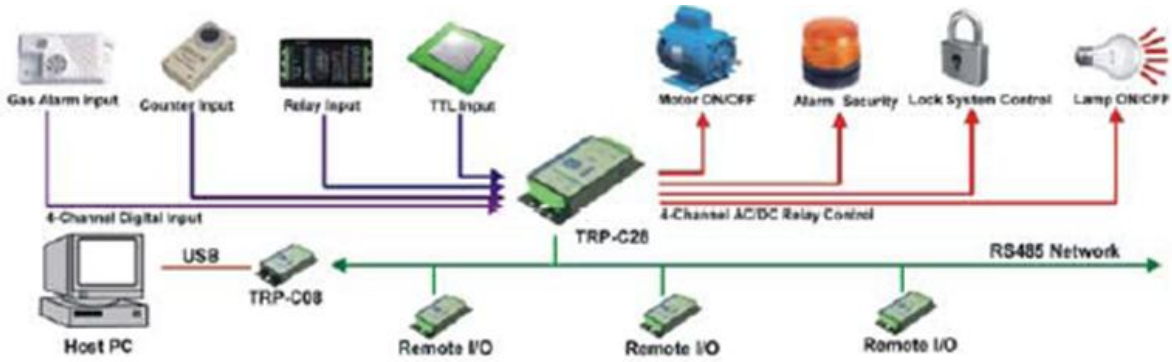

Copyright © 2010 NUUO Inc. All rights reserved.

Installation guide

SCB-C08 with SCB-C24/26/28

SCB-C24/C26/C28 must work with SCB-C08 (USB-RS485 converter) because general computer does not support RS485 interface directly.

1.) Plug SCB-C08 to USB port on the back of the PC and install SCB-C08 driver.

2.) Make sure the driver is installed successfully in device manager.

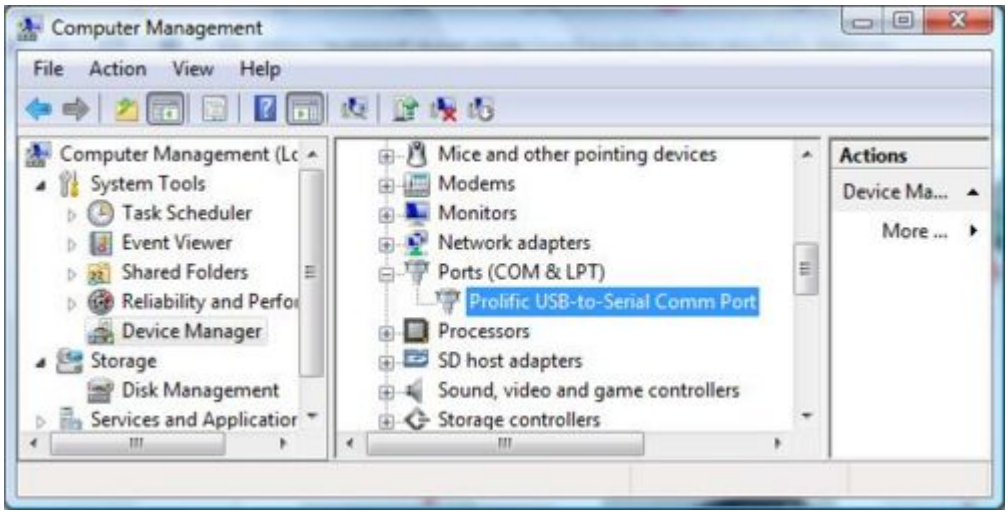

3.) Connect SCB-C24/26/28 to C08.(Take SCB-C08 with SCB-C28 for example as below)

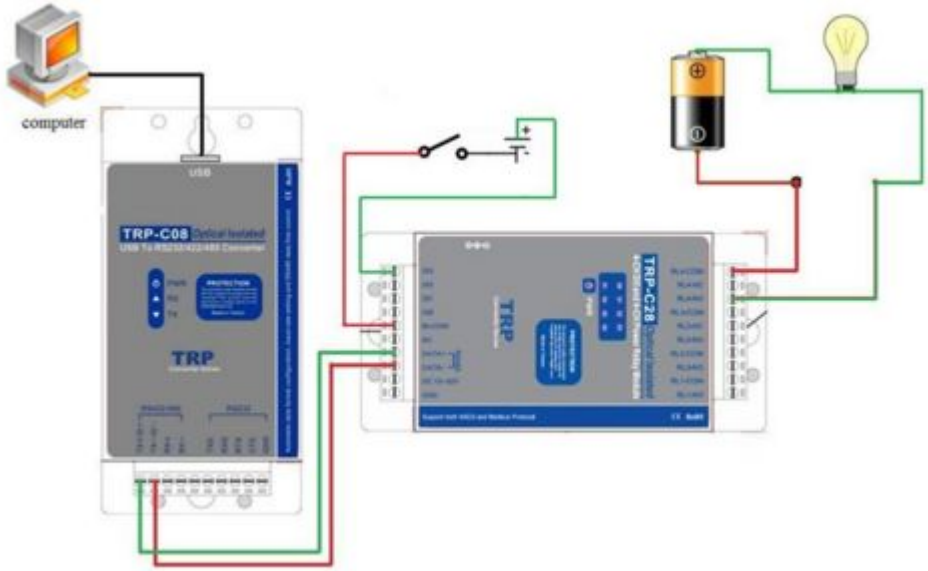

4.) Execute IOconfig.exe to check the COM port, Baud rate and starting address.

Copyright © 2010 NUUO Inc. All rights reserved.

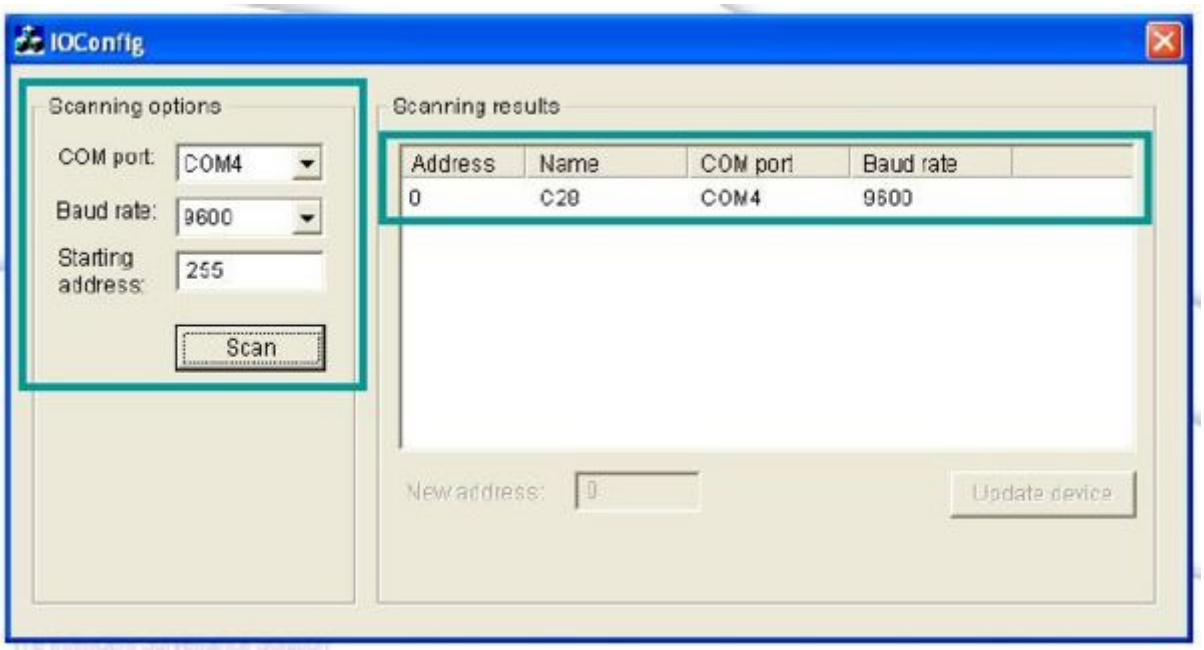

5.) Open Main console and go to **[Config]**->**[Setting]**->**[I/O Device]**

6.) Enter the desired name of **[Module]**, specify the model of **[Device]**, select the **[COM Port]**, and **[ID]** of the device.

SCB-G3-IO

1.) Connect SCB-G3-IO card to power supply on computer.

2.) Connect SCB-G3-IO card to capture card via attached cable.(SCB-7000s, SCB-6000s, SCB-3000s, and SCB-1000s card)

3.) Connect RJ-11 to COM port (RS-232) on back of PC for RS-485 application.

4.) Connect digital input/output devices to SCB-G3-IO card according to below diagrams.

Notice: **Please DO turn off the power of PC before installing SCB-G3-IO card.**

Copyright © 2010 NUUO Inc. All rights reserved.

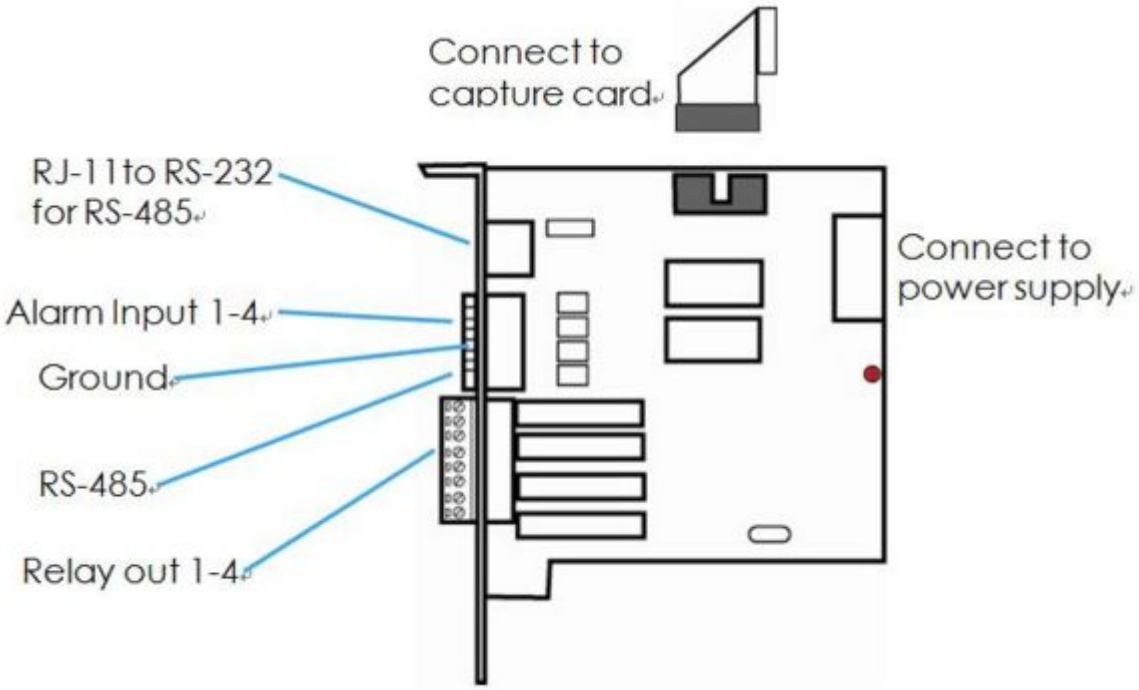

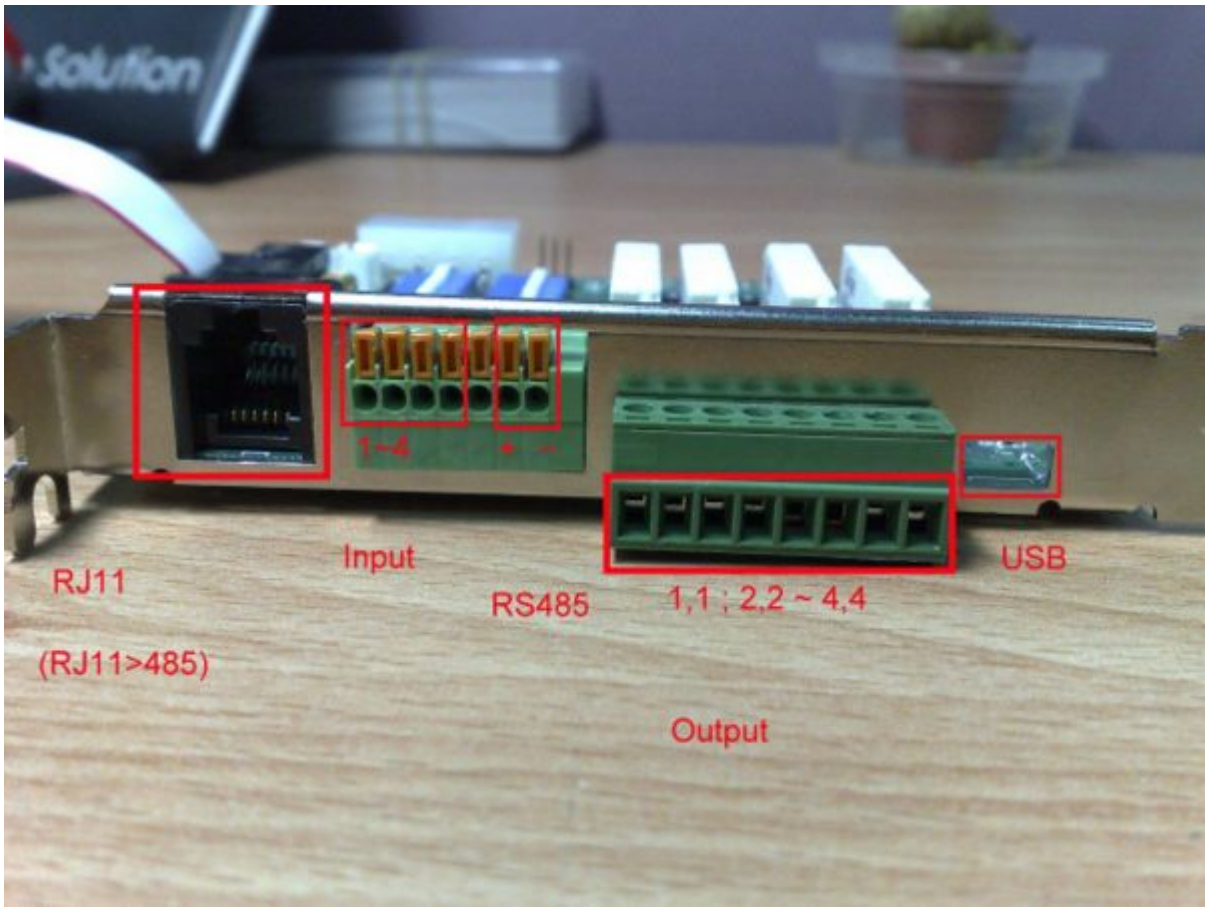

Copyright © 2010 NUUO Inc. All rights reserved.

FAQ

How to control PTZ from analog camera through SCB-C08 converter?

1. Connect SCB-C08 to the USB port on your PC.

2. Install the SCB-C08 driver.

3. Connect your analog PTZ camera to the SCB-C08 with RS485.

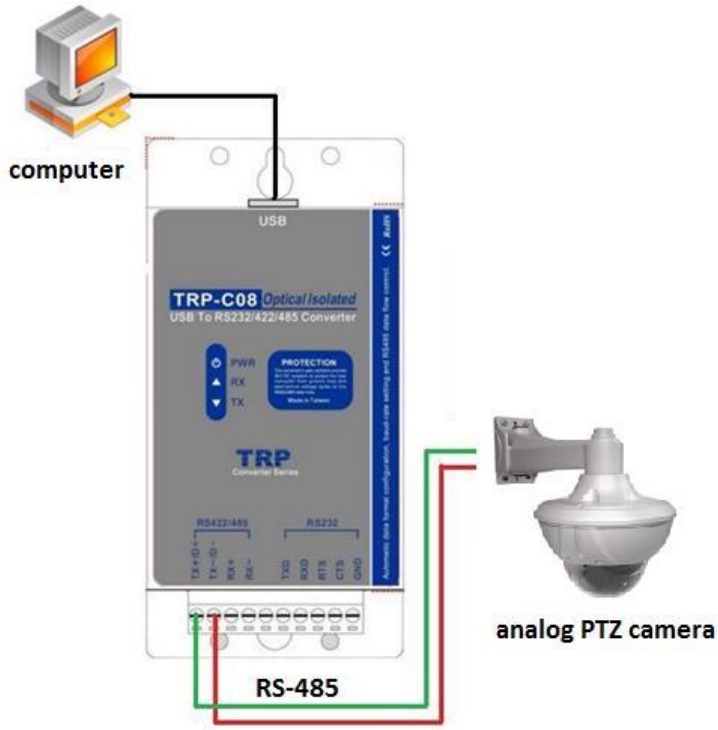

4. Right click on <My Computer> - <Manage> - <Device Manager> - <Port (Com & LPT)> and check the COM Port number for this SCB-C08.

   You will be able to see a <Prolific USB-to-Serial Comm Port> and this number is your COM Port number for SCB-C08.

   Take the following picture for example; the COM Port number for C08 is COM3.

Copyright © 2010 NUUO Inc. All rights reserved.

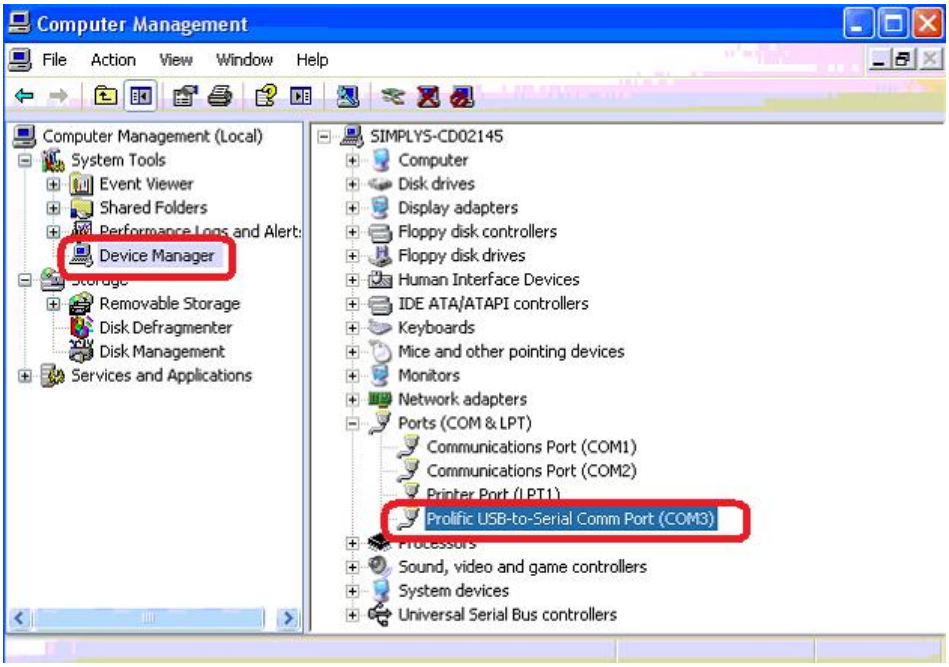

5. Start NUUO Main Console - <Config> -<Setting> - <PTZ COnfig> and then fill in the Basic Setting, inclusive of Camera model, COM Port, Baud Rate and Address.

   Please note: you need to check the analog camera user manual for the PTZ protocol and baud rate.

   The PTZ protocols NUUO currently supports are **Pelco D**, **Pelco P**, **Samsung**, **Lilin**, **Dynacolor**, and **SAE**.

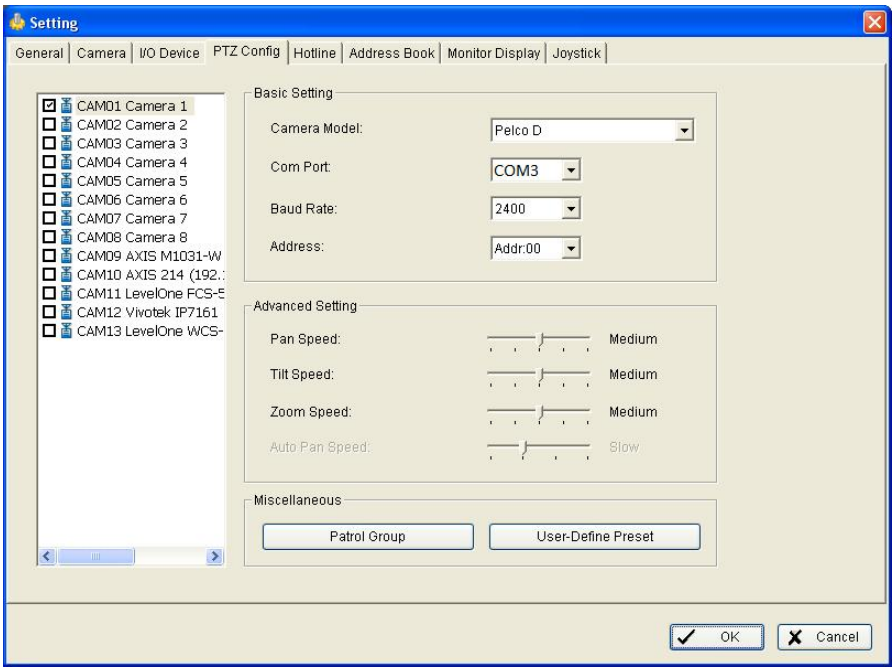

Copyright © 2010 NUUO Inc. All rights reserved.

How many I/O devices can I connect to SCB-C08?

Each SCB-C08 is able to connect to 256 I/O boxes (SCB-C24/C26/C28).

Each I/O box is identified by address of which range is from 0~255.

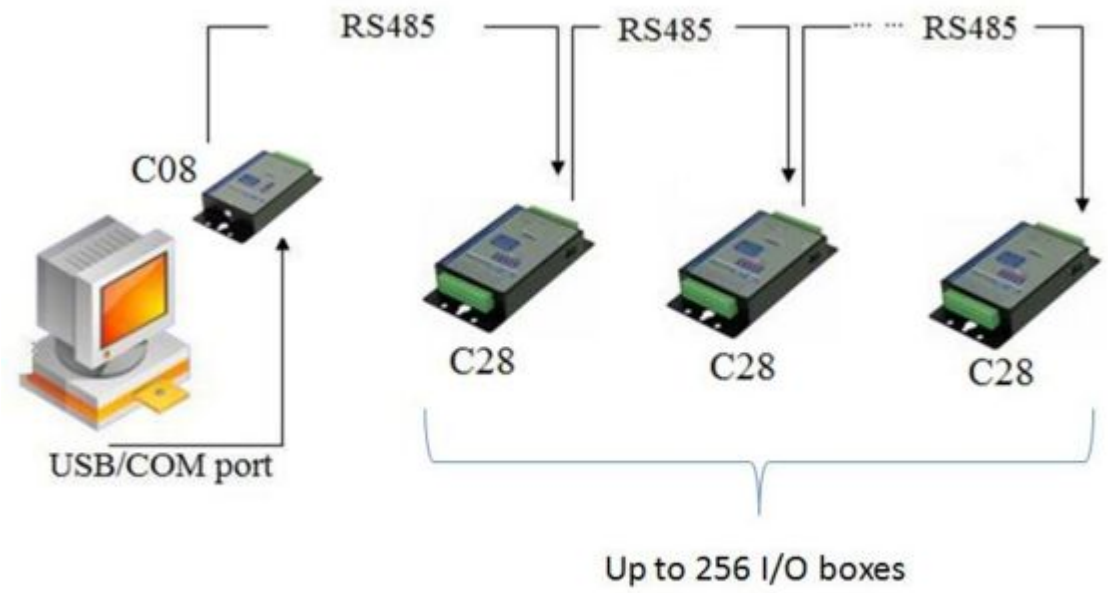

How do I reset C24/C26/C28?

If you can't find the I/O device by using IOconfig or it is not working properly, please reset it and try again.

1.) Turn off the Main Console

2.) While the power is plugged in, put the switches 1 and 2 to UP position then unplug the power

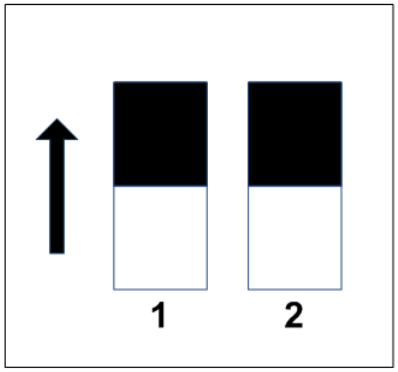

Copyright © 2010 NUUO Inc. All rights reserved.

3.) While the power is unplugged, put the switch 1 to DOWN position then plug in the power

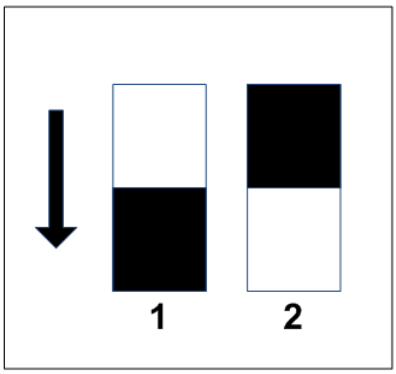

4.) Then plug in the power and put the switch 1 to UP position and switch 2 to DOWN position

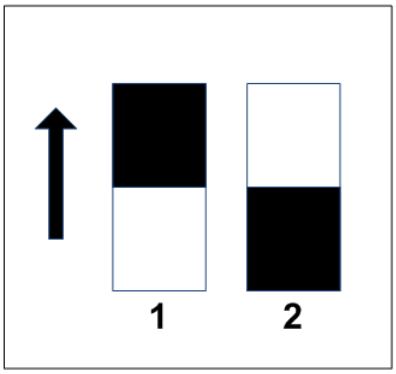

Copyright © 2010 NUUO Inc. All rights reserved.